BALBOA water group

VS100 PN 56473-03

OFF POSITION	DIP SWITCH #	ON POSITION
TEST MODE OFF*	◀ 1	TEST MODE ON*
UNUSED, P1, TEMP, LIGHT	2 ▶	P1, LT, TEMP DOWN, TEMP UP
DUPLEX PANEL	3 ▶	MINI PANEL
N/A MUST BE OFF	◀ 4	N/A MUST BE OFF
SEE PUMP TABLE	◀ 5	SEE PUMP TABLE
60HZ OPERATION	◀ 6	50HZ OPERATION
STD, ECON, SLEEP ALLOWED	◀ 7	STANDARD MODE ONLY
DEGREES FAHRENHEIT	◀ 8	DEGREES CELSIUS
SEE PUMP TABLE	◀ 9	SEE PUMP TABLE
HIGH AMP - HEAT W/P1 HI	10 ▶	LOW AMP - NO HEAT W/P1 HI

*SWITCH 1 IS NORMALLY OFF

ALL UNUSED SWITCHES SHOULD BE OFF

PUMP TIMEOUTS TABLE			
SWITCH 5	SWITCH 9	LOW SPEED	HIGH SPEED
OFF	OFF	2 HOURS	15 MINUTES
ON	OFF	2 HOURS	30 MINUTES
OFF	ON	15 MINUTES	15 MINUTES
ON	ON	30 MINUTES	30 MINUTES

USE COPPER CONDUCTORS ONLY.
EMPLOYER UNIQUEMENT DES CONDUCTEURS DE CUIVRE.
#8 AWG MIN. WIRE = 90°

FOR SUPPLY CONNECTIONS, USE CONDUCTORS SIZED ON THE BASIS OF 60°C AMPACITY BUT RATED MINIMUM OF 90°C.

TORQUE RANGE FOR MAIN TERMINAL BLOCK (TB1): 27-30 IN. LBS. (31.1-34.5 kg cm)

CONNECT ONLY TO CIRCUITS PROTECTED BY A CLASS A GFCI.

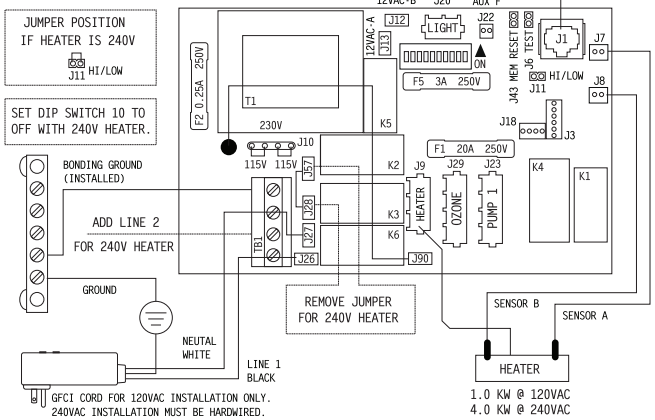

FOR HARDWIRED INSTALLATIONS, A DISCONNECTING MEANS MUST BE INSTALLED WITHIN SIGHT FROM THE EQUIPMENT AND AT LEAST 5 FEET (1.52 M) FROM THE INSIDE WALLS OF THE POOL, SPA, OR HOT TUB.

TOTAL OUTPUT AMP DRAW NOT TO EXCEED MAX INPUT RATING OF SPA.

USE EARTH GROUND CONNECTIONS AS INDICATED INSIDE THE SYSTEM ENCLOSURE.