P/N 54114HC1
MODEL LITELD

Balboa Instruments Incorporated

BALBOA INSTRUMENTS INC.
TUSTIN, CA.

Certified to comply with the limits for a class B computing device pursuant to subpart J of part 15 of the FCC rules

LISTED
B0593926630

60 HZ

MODEL: WH-LITELD-CCA

PAT. NO. 4618797

USE COPPER CONDUCTOR ONLY
#8 AWG MIN. WIRE = 90°C

EMPLOYER UNIQUEMENT DES CONDUCTEURS DE CUIVRE.

TORQUE RANGE FOR TB1: 16-18 IN. LBS

FOR SUPPLY CONNECTIONS, USE CONDUCTORS SIZED ON THE BASIS OF 60°C AMPACITY BUT RATED MINIMUM OF 90°C.

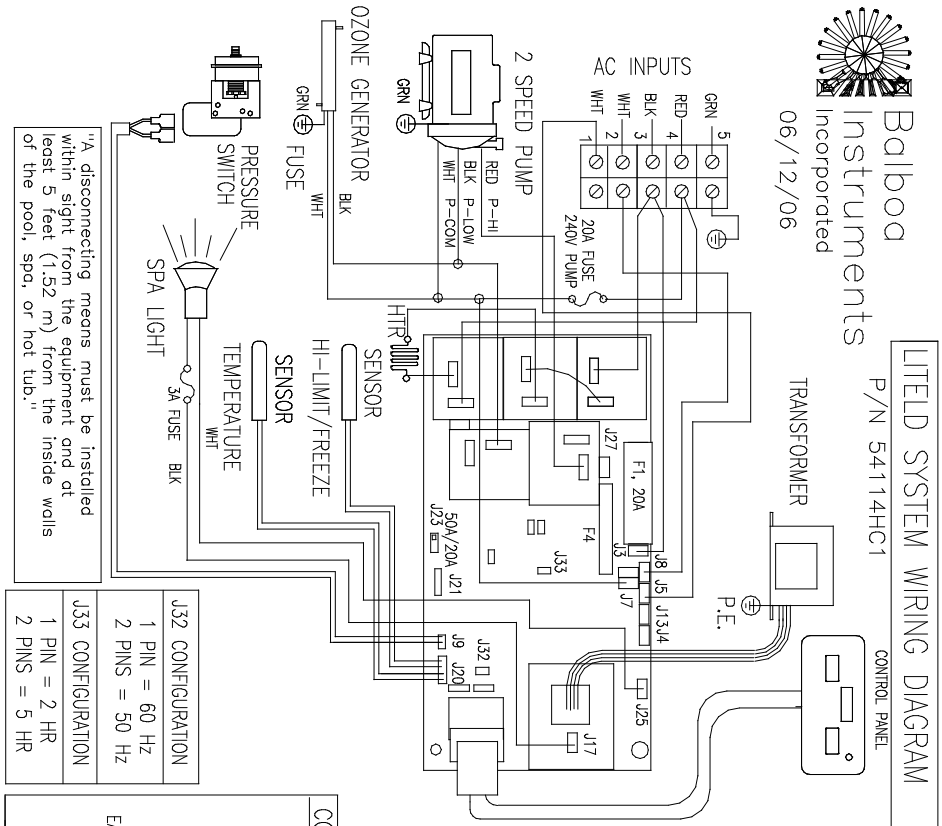

"A disconnecting means must be installed within sight from the equipment and at least 5 feet (1.52 m) from the inside walls of the pool, spa, or hot tub."

J32 CONFIGURATION	
1 PIN = 60 Hz	2 PINS = 50 Hz

J33 CONFIGURATION	
1 PIN = 2 HR	2 PINS = 5 HR

DEVICE	VOLTAGE	RATING
PUMP1	120/240V	15/12A
OZONE	120/240V	1A
SPA LIGHT	12V	12W
HEATER	120/240V	1KW/4KW

TOTAL OUTPUT AMPERAGE DRAW NOT TO EXCEED MAX INPUT RATING OF SPA.

120V TO 240V CONVERSION INSTRUCTIONS:

1. CONVERSION MUST BE PERFORMED BY A QUALIFIED, LICENSED ELECTRICIAN. HARDWIRE ONLY.
2. DISCONNECT FROM POWER & REMOVE CORD.
3. MOVE RED WIRES (TB1-1) TO (TB1-4) AS INDICATED BY DASHED LINES.
4. MOVE THE HEATER MODE SELECTOR (J23) ON THE CONTROL BOARD FROM 20A TO 50A POSITION.

If this unit is to be permanently connected, connect only to a circuit that is protected by a Class A ground fault circuit interrupter (G.F.C.I.).
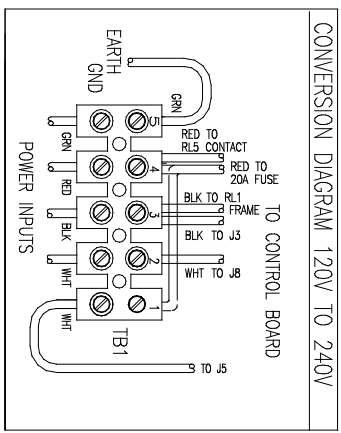
CONVERSION DIAGRAM 120V TO 240V