Owner's Operating Manual

Supreme Series Model NU-1000
110/220 Volt Convertible System

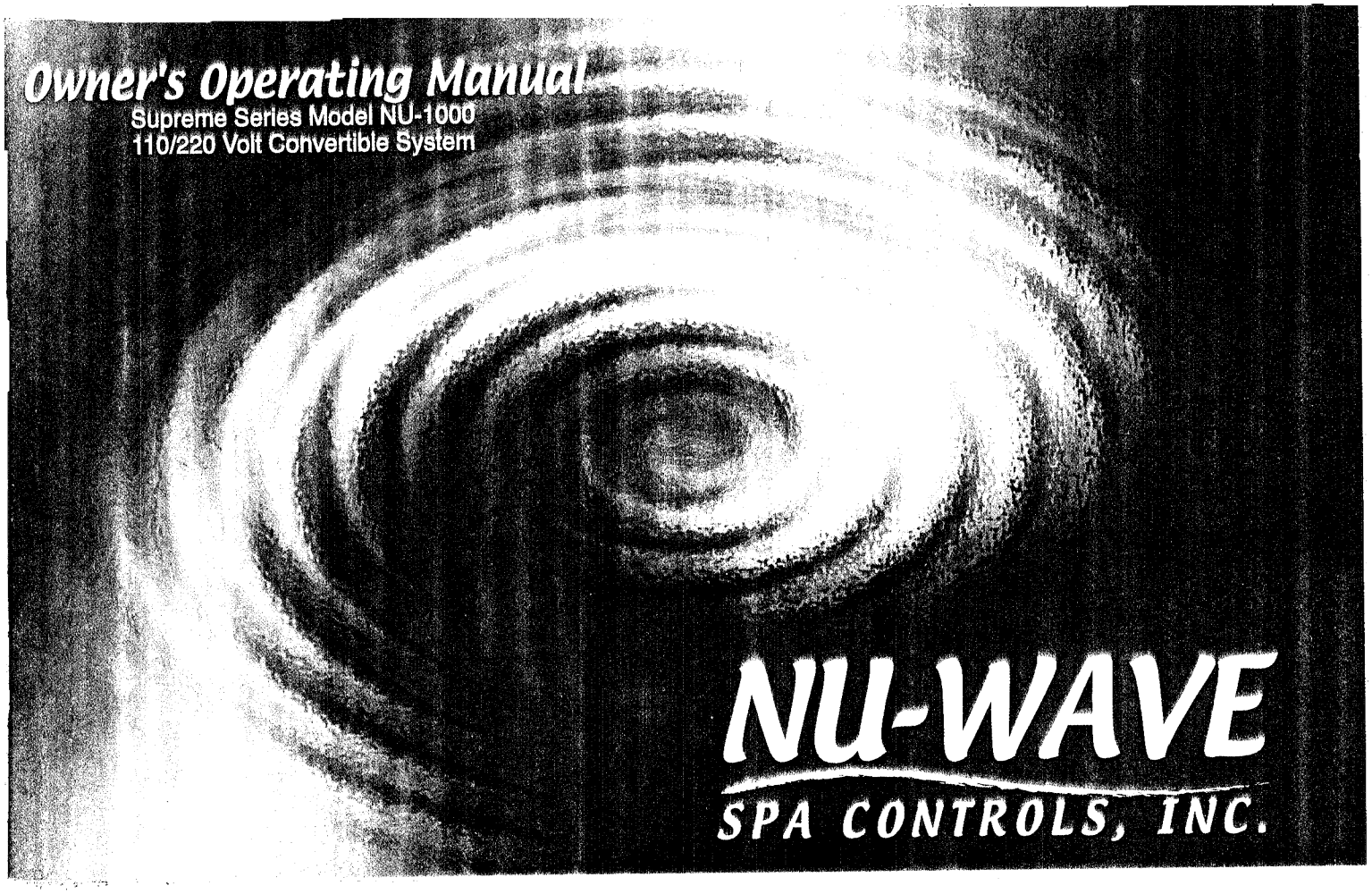

NU-WAVE
SPA CONTROLS, INC.

Congratulations on the purchase of your new spa. Your dealer has equipped your tub with the finest spa control system available in the industry. The spa control, also called the "Power Pack" is an integral part of your new system becuase it is the power pack that controls the various functions of your spa. With proper care and maintenance of both the tub and your power pack equipment you will enjoy years of recreation and relaxation. It is imperative that you follow your dealers tub maintenance and chemistry balance recommendations as well as the installation and maintnenance guidelines provided in this manual. Please take a moment to review these documents and keep them in an accessible location for future reference.

Old world craftsmanship and attention to detail have been the hallmark of NU-WAVE SPA CONTROLS, INC. for over 12 years. The unique design of NU-WAVE'S systems allow for removal of any component with only a screwdriver or pliers. All wiring is color coded. NU-WAVE Power Packs are engineered to fit under the skirting of most spas and tubs, and each and every system is 100% water tested at operating temperature prior to leaving the factory. The all-steel housing is finished with a rust-proof, scratch-resistant, fusion-bonded powder coat for extra long life. NU-WAVE control systems come with a two year warranty and all components are recognized or listed by Electronic Testing Laboratories (ETL) and/or Underwriter's Laboratories (UL).

Your 110/220 Volt Convertible System offers both convenience and performance in Spa Equipment. In the 110 mode your equipment offers simple installation and still allows for easy conversion to the 220 mode with higher performance. The two basic differences between modes are as follows:

1. In 220 mode the spa heats approximately 4 times faster.
2. In 220 mode the spa heats in all modes of operation, not just during low speed as in 110 mode.

Because the operation and installation of the equipment changes depending upon the mode (110 or 220), instructions for operating and installing your Spa Control in both modes are included.

To convert from 110 to 220 you must remove AC plug from terminal block inside the control box and move 110/220 select switch from the 20/30 Amp position to the 50 Amp position. Connect four wire 220 (2 Hots, Neutral and Ground) to the left side of terminal block exactly as shown below. Completely remove Jumper #2 and move Jumper #1 to connect terminal block positions 2 and 3 together.

DO NOT REMOVE OR REPOSITION ANY OTHER WIRES!

110 VOLT WIRING

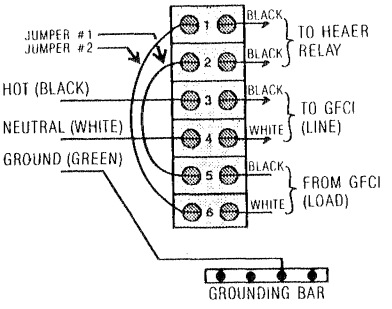

220 VOLT WIRING

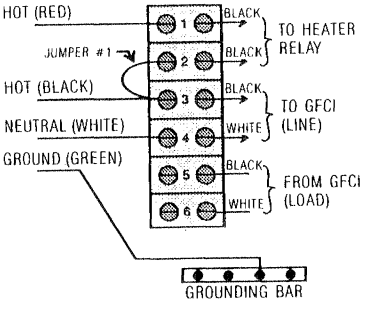

LOCATING YOUR PORTABLE SPA

INDOOR CONSIDERATIONS:

1. Foundation requirements. Be certain of structural support for your spa.
2. Humidity. Spas are natural humidifiers. Be mindful of locating spa where humidity will not damage walls and wall coverings (including wallpaper), furniture, fixtures or anything else that might be damaged by protracted contact with moisture.
3. Splash out. Allow for proper drainage.

OUTDOOR CONSIDERATIONS:

1. Provide a hard level surface for your spa.
2. Protect spa from prevailing winds when possible to prevent excessive heat loss.
3. Allow for splash out.

GENERALLY:

Electrical connection should be made by licensed contractor. Be informed of any local building codes.

220 VOLT SPECIFICATIONS

Description:	Dual air switch controlled relay circuit for controlling spa pump and blower.
Voltage:	220 VAC 60 Hz. circuits
Amperage:	50 Amps @ 220 VAC, 1 HP per circuit
Pump:	1 Pump, 2 Speed, 110 Volt

220 VOLT INSTALLATION

Do not bury any cables used in connecting this unit.

A pressure wire connector marked "GROUND" is provided on the underside of the unit. Connect a #8 (8.4mm^2) bare, solid strand copper wire to this and any other metallic equipment to be grounded in accordance with local requirements.

Connect to a 220 VAC, 60 Hz, 50 Amp Dedicated Circuit Only!

Unit should be connected with #8 gauge THHN wire (2 Hots, Neutral, and Ground) for electrical runs less than 75 ft. For runs greater than 75 ft. check with a licensed electrician. Use copper wires only.

LOCATING YOUR PORTABLE SPA

INDOOR CONSIDERATIONS:

1. Foundation requirements. Be certain of structural support for your spa.
2. Humidity. Spas are natural humidifiers. Be mindful of locating spa where humidity will not damage walls and wall coverings (including wallpaper), furniture, fixtures or anything else that might be damaged by protracted contact with moisture.
3. Splash out. Allow for proper drainage.

OUTDOOR CONSIDERATIONS:

1. Provide a hard level surface for your spa.
2. Protect spa from prevailing winds when possible to prevent excessive heat loss.
3. Allow for splash out.

GENERALLY:

Electrical connection should be made by licensed contractor. Be informed of any local building codes.

110 VOLT SPECIFICATIONS

Description:	Dual air switch controlled relay circuit for controlling spa pump and blower.
Voltage:	110 VAC 60 Hz. circuits
Amperage:	20 Amps @ 110 VAC, 1 HP per circuit
Pump:	1 Pump, 2 Speed, 110 Volt

110 VOLT INSTALLATION

Do not bury any cables used in connecting this unit.

The use of extension cords is UNSAFE and may not be used with this unit!

A pressure wire connector marked "GROUND" is provided on the underside of the unit. Connect a #8 (8.4mm^2) bare, solid strand copper wire to this and any other metallic equipment to be grounded in accordance with local requirements.

Connect the cord to a 110 VAC, 60 Hz, 20 or 30 Amp Dedicated Circuit Only!

EQUIPMENT PACK START-UP PROCEDURE

220 Volt, 4 Function, with Timeclock:

1. *Do not* turn on circuit breaker.
2. Fill spa with cool water to a level 3 inches below the top of surface skimmer.
3. Open cut-off valves (if supplied by your dealer) to allow water to flow into spa equipment.
4. Turn the temperature control knob to the "OFF" position.
5. Turn on circuit breaker.
6. Make certain the GFCI "RESET" button is pushed in.
7. Press "Jet" function button until "High" speed pump turns on.
8. Press GFCI "TEST" button. This shuts system off and checks the operation of the GFCI.
9. Press GFCI "RESET" button. The system will turn back on.
10. Set temperature control knob to desired temperature.
11. You may select either "temperature" or "timer" mode. ***Please read following section regarding setting of timeclock.***
12. Pressing the "Jet" function button will move system to Low Speed Pump position. In Low Speed Pump mode, system both heats and filters spa water as dictated by the settings of the spa timer or the setting of the temperature control knob. System will also heat in high speed mode.
13. Pressing the "Booster" function button will turn on the booster pump. This is a single speed pump.
14. Cover spa and let it heat to desired temperature. Do not expect hot water immediately.

EQUIPMENT PACK START-UP PROCEDURE

110 Volt, 4 Function, with Timeclock:

1. *Do not* plug in spa.
2. Fill spa with cool water to a level 3 inches below the top of surface skimmer.
3. Open cut-off valves (if supplied by your dealer) to allow water to flow into spa equipment.
4. Turn the temperature control knob to the "OFF" position.
5. Plug in spa.
6. Make certain the GFCI "RESET" button is pushed in.
7. Press "Jet" function button until "High" speed pump turns on.
8. Press GFCI "TEST" button. This shuts system off and checks the operation of the GFCI.
9. Press GFCI "RESET" button. The system will turn back on.
10. Set temperature control knob to desired temperature.
11. You may select either "temperature" or "timer" mode. ***Please read following section regarding setting of timeclock.***
12. Pressing the "Jet" function button will move system to Low Speed Pump position. In Low Speed Pump mode, system both heats and filters spa water as dictated by the settings of the spa timer or the setting of the temperature control knob.
13. Cover spa and let it heat to desired temperature. Do not expect hot water immediately.

USING YOUR SPA TIMER IN 220 VOLT MODE

A timer, if used properly, can help heat your spa more efficiently and assure hot water when you wish to bathe. Because the timer only controls the low speed pump you must leave the system in the low speed mode for the timer to operate. Your 220 Volt system will heat in both Low and High speed modes.

HOW TO USE YOUR TIMER

Determine spa heat loss over a 24 hour period by performing the following:

1. Bring spa up to desired temperature. (Do not exceed 104°F).
2. Bathe in your spa for as long as you desire, using all of the operating modes, as you prefer (i.e. Jets, Air, Jets and Air).
3. After bathing, cover spa with the suggested "hard" thermal cover.
4. Shut spa system completely down by pressing "TEST" button on your GFCI.
5. Wait 24 hours, then measure spa temperature. Subtract this reading from the original temperature setting. The difference is your spa's daily heat loss in degrees.

CALCULATE REQUIRED HEATING TIME

Calculate how many hours of heating are required to recover your daily heat loss by dividing the measured heat loss by eight (8). Your 220 Volt system generates an average spa temperature rise of 8°F per hour.* The resulting number is the number of hours required to bring spa back to preferred bathing temperature.

Example: Heat loss over a 24 hour period is 16°F. 16°F ÷ 8°F = 2 Hours.

Your spa must run 2 hours before the temperature rises back to the preferred bathing temperature.

*Of course, heat recovery time is greatly affected by seasonal temperature changes.

SETTING THE TIMER

The timer is a 24 Hour Dial. Each Plastic Tripper represents one half hour of operation. Press all plastic trippers in (into the off position). Simply pull out one tripper for every half hour you wish to operate the spa. Set these according to your previously calculated heat recovery time.

Example: You prefer bathing at 8:00 p.m. for approximately one hour. With a heat recovery time of 2 hours (as calculated in the previous example), after pressing all 48 trippers in, pull the tripper next to the 6:00 p.m. mark. Next, pull 5 more after it up to the 9:00 p.m. mark. Set this way, your spa will come ON and filter/heat at 6:00 p.m. every day, and it will shut off at 9:00 p.m. after your evening bathe.

Your Thermostat must be set at the desired temperature to heat every day. If you don't want to heat your spa, but still wish to filter it (i.e. you are on vacation) just turn the thermostat down and your spa will still filter during the programmed time.

USING YOUR SPA TIMER IN 110 VOLT MODE

A timer, if used properly, can help heat your spa more efficiently and assure hot water when you wish to bathe. Because your 110 Volt system heats and filters your spa only in the low speed pump mode, it is important to program your spa to function in the low speed heat/filter mode as long as required. The timer will "program" your spa for you.

HOW TO USE YOUR TIMER

Determine spa heat loss over a 24 hour period by performing the following:

1. Bring spa up to desired temperature. (Do not exceed 104°F).
2. Bathe in your spa for as long as you desire, using all of the operating modes, as you prefer (i.e. Jets, Air, Jets and Air).
3. After bathing, cover spa with the suggested "hard" thermal cover.
4. Shut spa system completely down by pressing "TEST" button on your GFCI.
5. Wait 24 hours, then measure spa temperature. Subtract this reading from the original temperature setting. The difference is your spa's daily heat loss in degrees.

CALCULATE REQUIRED HEATING TIME

Calculate how many hours of heating are required to recover your daily heat loss by dividing the measured heat loss by two (2). Your 110 Volt system generates an average spa temperature rise of 2°F per hour.* The resulting number is the number of hours required to bring spa back to preferred bathing temperature.

Example: Heat loss over a 24 hour period is 10°F. 10°F ÷ 2°F = 5 Hours.

Your spa must run 5 hours before the temperature rises back to the preferred bathing temperature.

*Of course, heat recovery time is greatly affected by seasonal temperature changes.

SETTING THE TIMER

The timer is a 24 Hour Dial. Each Plastic Tripper represents one half hour of operation. Press all plastic trippers in (into the off position). Simply pull out one tripper for every half hour you wish to operate the spa. Set these according to your previously calculated heat recovery time.

Example: You prefer bathing at 8:00 p.m. for approximately one hour. With a heat recovery time of 5 hours (as calculated in the previous example), after pressing all 48 trippers in, pull the tripper next to the 3:00 p.m. mark. Next, pull 11 more after it up to the 9:00 p.m. mark. Set this way, your spa will come ON and filter/heat at 3:00 p.m. every day, and it will shut off at 9:00 p.m. after your evening bathe.

Your Thermostat must be set at the desired temperature to heat every day. If you don't want to heat your spa, but still wish to filter it (i.e. you are on vacation) just turn the thermostat down and your spa will still filter during the programmed time.

CONTROL PANEL

The Control Panel on your equipment pack comprises the "brains" of the power pack. Familiarize yourself with its components, described below. Additional instructions follow for proper use of the equipment pack and control panel.

CONTROL PANEL — COMPONENT IDENTIFICATION

#1 Ground Fault Circuit Interrupter (GFCI)
- A. Push for power "ON" or "RESET"
- B. Push for power "OFF" or "TEST"

#2 Temperature Control — Set to desired temperature

#3. Heater "TEMP" and "TIMER" switch

#4. Hi Limit Reset

#5. Timeclock

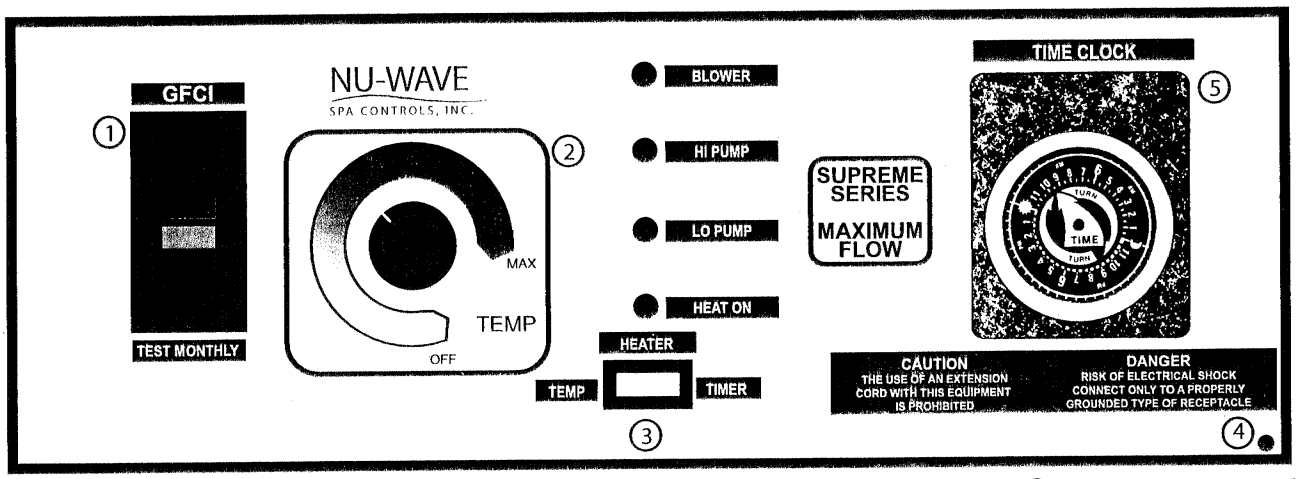

MAINTENANCE

FILTER CARTIRDGE CLEANING

Filter cleaning becomes necessary when the flow has decreased. To clean filter, turn off circuit breaker and shut off service valves. Remove filter lid or housing and lift out cartridge. Do not use a brush to clean cartridge. Use a high pressure nozzle and rinse fabric clean. If the fabric appears stained after rinsing, soak cartridge in a muriatic acid solution of 6 parts water to 1 part acid for about 30 minutes. Then repeat the rinsing. In new installations it may be necessary to clean filter 2 or 3 times the first week. For restarting unit, follow initial start-up instructions.

GFCI TESTING

The Ground Fault Circuit Interrupter must be tested every 30 days. Simply depress the "TEST" button to see if the GFCI trips. If so, push the "RESET" button. If the unit does not trip, *DO NOT USE THE EQUIPMENT!* CONTACT YOUR DEALER IMMEDIATELY.

NOTE: The Ground Fault Circuit Interrupter will trip if water or moisture gets in, on or around the equipment. Keep the area near the equipment dry.

WINTERIZING OR VACATIONING

Leaving for a long duration or winterizing, draining of the spa is recommended. Unplug the GFCI (or shut off the circuit breaker that supplies power to the equipment), store it with the equipment and cover equipment and spa.

NOTE: For best possible heating and economy it is best to insulate around your spa. Also, make sure you have a good spa cover.

KEEPING SPA WATER CHEMISTRY BALANCED

It is extremely important to maintain pH and chlorine within the ranges recommended by your spa dealer. Failure to maintain proper water chemistry can create health hazards and may shorten the life and decrease the performance of your spa and its equipment. Contact your dealer for guidance in maintaining spa water chemistry.

TROUBLE SHOOTING

UNIT WILL NOT OPERATE

1. Check GFCI to see if it is in the tripped position. If it has tripped press the "RESET" button.
2. If the GFCI is not tripped, check main breaker panel. If the breaker has tripped, this may indicate the unit has been wired into a common (non-dedicated) circuit which would cause over-heating of the circuit and continued problems.
3. If either the GFCI or the main circuit breaker will not reset, consult your dealer.

UNIT WILL RUN, BUT WILL NOT SWITCH

1. Repeat priming instructions.
2. If unit continues to fail to prime, consult your dealer about pressure testing line to find a possible vacuum leak which would prevent unit from priming.

UNIT OPERATES: NO WATER FLOW

1. Make sure valves are in open position.
2. Filter may need cleaning — see filter cleaning instructions.
3. Check impeller for possible blockage.
4. If new installation, check therapy jets for blockage.

UNIT WILL NOT HEAT

1. Pump must be running for spa to heat. (Low speed only in 110 Volt mode)
2. Be sure thermostat control is set high enough.
3. Close air control valves (Venturi air).
4. Check filter. A dirty filter shuts off water flow.

WATER CLOUDY

1. Check chemical balance in the spa.
2. Filter may need cleaning.
3. Change water.

If any of the separate components (Blower, Heater, or the Control Box) fail, contact your dealer for service or warranty information.

***NOTE:** Service by a qualified electrician is always recommended.*

DANGER

RISK OF CHILD DROWNING:

Extreme caution must be exercised to prevent unauthorized access by children. To avoid accidents, insure that children cannot use a spa or hot tub unless they are supervised at all times.

RISK OF ELECTRICAL SHOCK:

Do not permit any electrical appliance, such as a light, telephone, radio or television within five feet (1.5 meters) of the spa. Never operate any electrical appliances from inside the spa or while wet.

Install at least five feet from all metal surfaces. A spa may be installed within five feet of metal surfaces if, in accordance with the National Electric Code, each metal surface is permanently connected by a No. 8 AWG (8.4mm) solid copper conductor attached to the wire connector on the terminal box that is provided for this purpose.

A pressure wire connector marked "GROUND" is provided on the surface of the control box inside the spa to permit the connection of a minimum No. 8 AWG solid copper bonding wire between this point and any metal equipment, metal enclosures of electrical equipment, metal water pipe, or conduit within five feet of the spa as needed to comply with National Electric Code and local requirements.

Connect 120V powered systems to a grounded, grounding type receptacle only. Do not bury the power cord. The 120V power cord is designed to fit only a 20 amp receptacle. Do not modify the power cord for any reason to fit any other supply receptacle. To reduce the risk of electrical shock, replace damaged cord immediately.

Disconnect the electrical circuit to the spa by turning off the main circuit breaker before any service on the spa equipment is performed. Verify that the circuit is open (de-energized) by testing with a voltmeter.

The electrical supply for all permanently connected units not provided with an integral disconnecting means must include a suitable switch or circuit breaker to open all underground supply conductors to comply with section 422-20 of the National Electric Code, ANSI/NFPA 70-1987. The disconnecting means must be readily accessible to the tub occupant but installed at least five feet (1.5 meters) from the tub.

WARNING

TO REDUCE THE RISK OF INJURY:

Do not remove suction grate. Suction through drains and skimmers is powerful when jets in the spa are in use. Damaged covers can be hazardous to small children and adults with long hair. Should any part of the body be drawn into these fittings, turn off the spa immediately. As a precaution, long hair should not be allowed to float in the spa.

The water in a spa or hot tub should never exceed 40°C (104°F). Water temperatures between 30°C (100°F) and 40°C (104°F) are considered safe for a healthy adult. Lower water temperatures are recommended for extended use (exceeding 10 to 105 minutes) and for young children.

Since excessive water temperatures have a high potential for causing fetal damage during early months of pregnancy, pregnant or possibly pregnant women should limit spa or hot tub water temperatures to 39°C (100°F).

Before entering a spa or hot tub, the user should measure the water temperture with an accurate thermometer since the tolerance of water temperature regulating devices may vary as much as ±3°C (5°F).

The use of alcohol, drugs or medication before or during spa or hot tub use may lead to unconsciousness with the possibility of drowning.

Persons suffering from obesity or with a medical history of heart disease, low or high blood pressure, circulatory system problems, or diabetes should consult a physician before using a spa or hot tub.

Persons using medication should consult a physician before using a spa or hot tub since some medication may, induce drowsiness while other medication may affect heart rate, blood pressure, and circulation.

People with infectious diseases should not use a spa or hot tub. Warm and hot water may allow the growth of infectious bacteria if not properly disinfected.

FOR INDOOR USE ONLY. The electrical equipment is not intended for outdoor use. This equipment must be protected from the weather at all times. The compartment that the equipment is installed in must provide for water drainage away from electrical components. It is the spa owners responsibility to insure that the final inspection of the installation does not allow standing water in the equipment area.

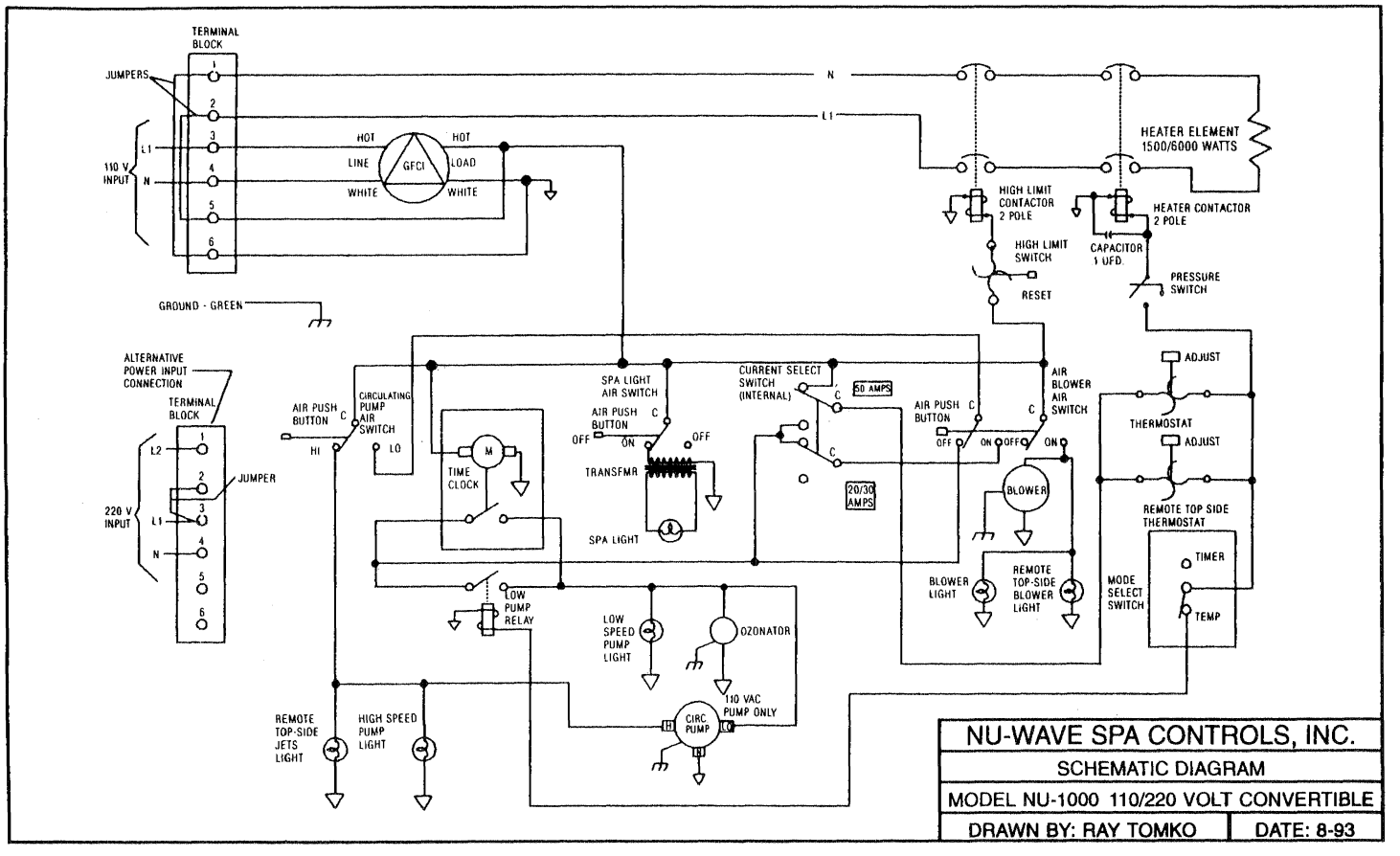
TERMINAL BLOCK
JUMPERS
110 V INPUT
L1
N
HOT
LINE
GFCI
LOAD
WHITE
GROUND - GREEN
ALTERNATIVE POWER INPUT CONNECTION
220 V INPUT
L2
JUMPER
HEATER ELEMENT 1500/6000 WATTS
HIGH LIMIT CONTACTOR 2 POLE
HEATER CONTACTOR 2 POLE
HIGH LIMIT SWITCH
CAPACITOR 1 UFD.
RESET
PRESSURE SWITCH
AIR PUSH BUTTON
CIRCULATING PUMP AIR SWITCH
HI
LO
TIME CLOCK
SPA LIGHT AIR SWITCH
OFF
ON
TRANSFMR
SPA LIGHT
CURRENT SELECT SWITCH (INTERNAL)
50 AMPS
20/30 AMPS
AIR BLOWER AIR SWITCH
BLOWER
ADJUST
THERMOSTAT
REMOTE TOP SIDE THERMOSTAT
TIMER
TEMP
MODE SELECT SWITCH
BLOWER LIGHT
REMOTE TOP-SIDE BLOWER LIGHT
LOW PUMP RELAY
LOW SPEED PUMP LIGHT
OZONATOR
110 VAC PUMP ONLY
CIRC. PUMP
REMOTE TOP-SIDE JETS LIGHT
HIGH SPEED PUMP LIGHT
NU-WAVE SPA CONTROLS, INC.
SCHEMATIC DIAGRAM
MODEL NU-1000 110/220 VOLT CONVERTIBLE
DRAWN BY: RAY TOMKO
DATE: 8-93

POWER PACK EQUIPMENT LIMITED WARRANTY

NU-WAVE
SPA CONTROLS, INC.

To all original purchasers of its products, Nu-Wave Spa Controls, Inc. (Nu-Wave) Warrants its products to be free from defects in material and workmanship for a period of two (2) years from date of purchase.

Products which fail or become defective during the Warranty period, except as a result of freezing, accident, improper installation, use or care, shall be repaired or replaced at our option without charge, within ninety (90) days of receipt of defective product, barring unforeseen delays.

To obtain Warranty replacement or repair, defective products should be returned, transportation paid, to the place of purchase or to the nearest Nu-Wave Service Center. For further information, contact Nu-Wave's Customer Service Department Monday through Friday between 8:00am and 5:00pm Pacific Standard Time.

Nu-Wave shall not be responsible for cartage, removal and/or reinstallation labor, or any other costs incurred in obtaining warranty repairs or replacement.

3949 East La Palma Avenue
Anaheim, CA 92807
714-666-2171
714-666-1053 Fax